Technical datasheet

WORT-M-950-2-SYM-BL



Product description

Worker Track Duo is a linear LED luminaire for 3-phase track system with LED source with 50,000 hours lifetime. Available in 3 power options, color temperatures 3000K/4000K/5000K with CRI 80+/90+. Five light distribution types (50°, 80°, ASYM, SYM, WAS) with special optics reducing glare and DALI control option available. Provides comfortable and natural lighting with easy track system installation. Ideal for offices and stores. 5-year warranty.

LED | 220-240 V 50-60 Hz | IP20 | UGR < 19 | CCT 5000 k | CRI 90+ | DALI 2

Product technical data

Mains voltage	220 - 240V AC, 50/60Hz
Connection method	3-phase track adapter
Dimming type	DALI
IP rating	20
Protection class	II
Ambient temperature	0 to +25 °C
Light source	LED
Colour temperature	5000k
Color rendering index	90
Rated luminous flux	3,983 lm
Connected load	40.60 W
Luminous efficacy	98.1 lm/W

Ripple	1 %
DALI address	1
Standby power	0.30 W
Inrush current	15 A
Inrush time	100 µs
Optical system	Lenses
Optical part material	PMMA
Housing material	Aluminium
Surface finish	Powder coated
Width	44.00 cm
Height	53.00 cm
Length	1,122.00 cm
Weight	2.80 kg
Service lifetime (L80 B10)	50 000 h
Warranty	5 years

Dimensions

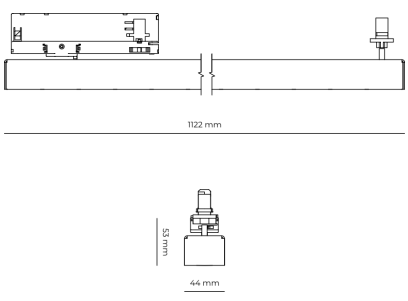

Light distribution

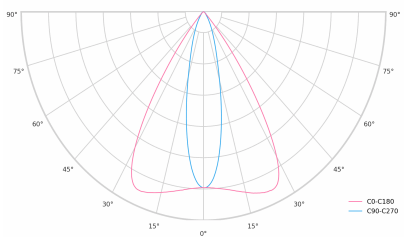

DALI 2

DALI (Digital Addressable Lighting Interface) is an international standard for digital lighting control systems. It enables individual control of each luminaire in the network using digital signals - unlike traditional analog solutions.

Key DALI2 innovations:
Advanced diagnostic capabilities
Better fault reporting and device status
Enhanced scene programming options
Support for RGB/RGBW and tunable white